FCS Series

Applications

-Thermal Protection Of Winding in electric motors
-Limit temperature monitoring

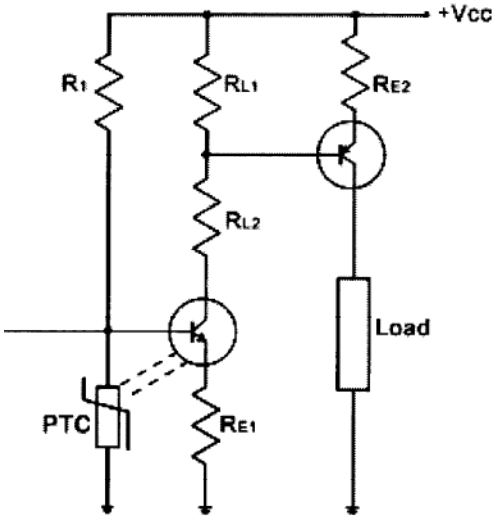

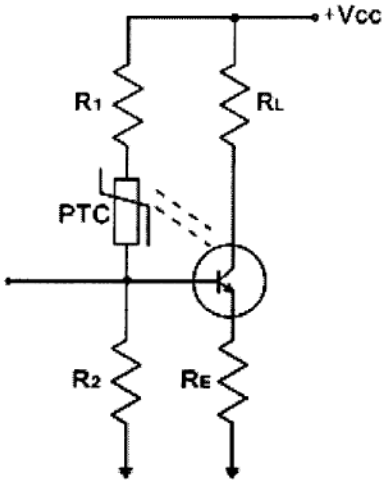

Making use of the characteristics that the resistance of PTC thermistor increases sharply above curie temperature, when ambient temperature increases abnormally, protective circuit with PTC thermistor installed will turn on or cut off loop through resistance changing, achieving protection purpose.

Main parameters

Protection temperature point TS（°C）
Rated zero power resistance R25(Ω)
Resistance at protection temperature
Resistance at protection temperature--15°C （RS-15，Max）

Operating principle

As in fig. 1, in normal ambient temperature, PTC thermistor resistance Rp<Rs, lower output voltage. When ambient temperature exceeds set temperature, PTC thermistor resistance Rp increases rapidly, and exceeds
Resend leads Vo increases to high enough voltage, and cause tripping.

JIN ZON ENTERPRISE CO., LTD http://www.jinzon.com.tw/ Tel：886-2-27111093~5
Address：4F-3. No.171. Sec.2. Chang An E. Rd. Taipei. Taiwan. R.O.C. Fax：886-2-27310902,27764624

Over Temperature Protection

ST-Type

R	7.5±0.5
r	3.2±0.1
T	4.3±0.5
t	0.5±0.1
W	6.5±0.5
L	60.0±5.0
DΦ	1.2±0.2
dΦ	0.45±0.1

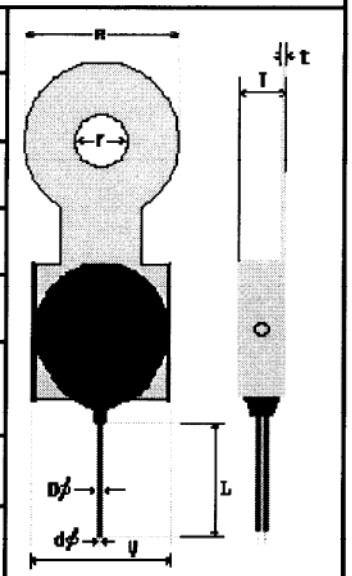

SR-Type

Tmax	3.5
Dmax	5.5
Hmax	10.0
Lmax	25.0
F	5.0±1.0
dΦ	0.5±0.1

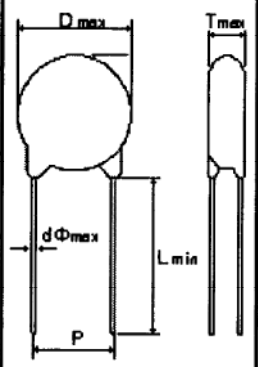

SY-Type

R	7.5±0.5
r	3.5±0.5
T	4.0±0.5
t	0.4±0.1
Lmin	25.0
F	5.0±1.0
dΦ	0.5±0.1

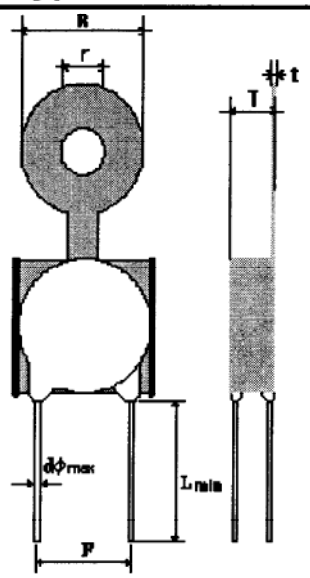

Model No.	Max. Voltage (V)	Curie Temp. (±5℃)	Sensing Temp.(ST) (℃)	Resistance Value (Ω)		
				at 25℃	at ST-10℃	at ST+10℃
FCSSR(T/L)06850SD05	DC 24	60	80	Max. 100	Max. 550	Min. 550
FCSSR(T/L)07850SD05	DC 24	70	90	Max. 100	Max. 550	Min. 550
FCSSR(T/L)08500SD05	DC 24	80	100	Max. 100	Max. 570	Min. 570
FCSSR(T/L)09500SD05	DC 24	90	110	Max. 100	Max. 570	Min. 570
FCSSR(T/L)10500SD05	DC 24	100	120	Max. 100	Max. 570	Min. 1,330
FCSSR(T/L)12500SD05	DC 24	120	140	Max. 100	Max. 570	Min. 1,330

JIN ZON ENTERPRISE CO., LTD http://www.jinzon.com.tw/ Tel：886-2-27111093~5
Address：4F-3. No.171. Sec.2. Chang An E. Rd. Taipei. Taiwan. R.O.C. Fax：886-2-27310902,27764624